BR27218

R.P.E. TECHNICAL REPORT
No. 71/4

UNLIMITED

AD 742473

ROCKET PROPULSION ESTABLISHMENT
WESTCOTT

R.P.E. TECHNICAL REPORT No. 71/4

THE DESIGN OF A STAND TO MEASURE THRUST ALIGNMENT IN SOLID PROPELLENT ROCKET MOTORS

by

D. S. Dean

E. A. Lyons

D. R. Norman

AUGUST 1971

D D C
RECEIVED
MAY 31 1972
B

SEE OVER FOR RELEASE CONDITIONS
FOR OVERSEAS DISTRIBUTION

RELEASE CONDITIONS FOR OVERSEAS DISTRIBUTION

A

1. THIS INFORMATION IS RELEASED BY THE UK GOVERNMENT TO THE RECIPIENT GOVERNMENT FOR DEFENCE PURPOSES ONLY.
2. THIS INFORMATION MUST BE ACCORDED THE SAME DEGREE OF SECURITY PROTECTION AS THAT ACCORDED THERETO BY THE UK GOVERNMENT.
3. THIS INFORMATION MAY BE DISCLOSED ONLY WITHIN THE DEFENCE DEPARTMENTS OF THE RECIPIENT GOVERNMENT AND TO ITS DEFENCE CONTRACTORS WITHIN ITS OWN TERRITORY, EXCEPT AS OTHERWISE AUTHORISED BY THE MINISTRY OF DEFENCE (PROCUREMENT EXECUTIVE) REPORTS CENTRE. SUCH RECIPIENTS SHALL BE REQUIRED TO ACCEPT THE INFORMATION ON THE SAME CONDITIONS AS THE RECIPIENT GOVERNMENT.
4. THIS INFORMATION MAY BE SUBJECT TO PRIVATELY-OWNED RIGHTS.

B

1. THIS INFORMATION IS RELEASED BY THE UK GOVERNMENT TO THE RECIPIENT GOVERNMENT FOR DEFENCE PURPOSES ONLY.
2. THIS INFORMATION MUST BE ACCORDED THE SAME DEGREE OF SECURITY PROTECTION AS THAT ACCORDED THERETO BY THE UK GOVERNMENT.
3. THIS INFORMATION MAY BE DISCLOSED ONLY WITHIN THE DEFENCE DEPARTMENTS OF THE RECIPIENT GOVERNMENT AND TO THOSE NOTED IN THE ATTACHED LIST, EXCEPT AS OTHERWISE AUTHORISED BY THE MINISTRY OF DEFENCE (PROCUREMENT EXECUTIVE) REPORTS CENTRE. SUCH RECIPIENTS SHALL BE REQUIRED TO ACCEPT THE INFORMATION ON THE SAME CONDITIONS AS THE RECIPIENT GOVERNMENT.
4. THIS INFORMATION MAY BE SUBJECT TO PRIVATELY-OWNED RIGHTS.

ACCESSION for
NTIS WHITE SECTION
DDC BUFF SECTION
UNANNOUNCED
JUSTIFICATION
BY
DISTRIBUTION/AVAILABILITY CODES
AVAIL. and/or SPECIAL
A

C

1. THIS INFORMATION IS RELEASED BY THE UK GOVERNMENT TO THE RECIPIENT GOVERNMENT FOR DEFENCE PURPOSES ONLY.
2. THIS INFORMATION MUST BE ACCORDED THE SAME DEGREE OF SECURITY PROTECTION AS THAT ACCORDED THERETO BY THE UK GOVERNMENT.
3. THIS INFORMATION MAY BE DISCLOSED ONLY WITHIN THE DEFENCE DEPARTMENTS OF THE RECIPIENT GOVERNMENT, EXCEPT AS OTHERWISE AUTHORISED BY THE MINISTRY OF DEFENCE (PROCUREMENT EXECUTIVE) REPORTS CENTRE.
4. THIS INFORMATION MAY BE SUBJECT TO PRIVATELY-OWNED RIGHTS.

D

5. THIS INFORMATION IS RELEASED FOR INFORMATION ONLY AND IS TO BE TREATED AS DISCLOSED IN CONFIDENCE. THE RECIPIENT GOVERNMENT SHALL USE ITS BEST ENDEAVOURS TO ENSURE THAT THIS INFORMATION IS NOT DEALT WITH IN ANY MANNER LIKELY TO PREJUDICE THE RIGHTS OF ANY OWNER THEREOF TO OBTAIN PATENT OR OTHER STATUTORY PROTECTION THEREFOR.
6. BEFORE ANY USE IS MADE OF THIS INFORMATION FOR THE PURPOSE OF MANUFACTURE, THE AUTHORISATION OF THE MINISTRY OF DEFENCE (PROCUREMENT EXECUTIVE) REPORTS CENTRE MUST BE OBTAINED.

UDC 621.455.001.5: 531.22

ROCKET PROPULSION ESTABLISHMENT
WESTCOTT

Technical Report No. 71/4

August 1971

THE DESIGN OF A STAND TO MEASURE THRUST ALIGNMENT IN SOLID PROPELLENT ROCKET MOTORS

by

D. S. Dean
E. A. Lyons
D. R. Norman

SUMMARY

A thrust stand and calibration system is described by which the dir of the thrust vector of a rocket motor can be resolved over consecutive intervals to within 0.7 milliradian. The angle of the overall impulse can be measured to better than 0.5 milliradian. Methods of improving t accuracy of the system are discussed.

CONTENTS

		Pag
1	INTRODUCTION	3
2	DESIGN OF FIRING BAY AND RIG	3
	2.1 Firing bay	3
	2.2 Thrust stand	3
	2.3 Alignment and calibration	4
3	RECORDING	6
4	ACCURACY LIMITATIONS AND IMPROVEMENTS	7
5	CONCLUSION	9
Appendix A	- Effects of strut misalignment	10
Appendix B	- Analysis of data from thrust alignment records	14
Table	- Errors due to strut misalignment	18
Reference		19
Illustrations	- Fig. 1 to 9	

1 INTRODUCTION

When designing rocket propelled missiles it is important to know by how much the line of action of the thrust vector may deviate from the geometric axis of the motor. Although the maximum permitted deviation will vary from motor to motor it is usually in the region of 5 milliradian, so that the side forces to be measured will be about 0.005 of the axial thrust. If we aim at an accuracy of ± 2% we must measure the angle to ± 0.1 milliradian, i.e. the side forces must be measured to 0.0001 of the axial thrust.

As an example consider a motor of 5000 N (1130 lbf) thrust; the maximum side forces will be 25 N (5.6 lbf) measured to an accuracy of ± 0.5 N (0.1 lbf). Measurement of such small side forces in the presence of a large static axial force is difficult, but it becomes much more difficult when the axial force is applied rapidly (about 5 ms rise time) and fluctuates rapidly during the firing, which may occupy less than 1 second. In addition, the direction of the thrust vector may vary throughout the firing.

2 DESIGN OF FIRING BAY AND RIG

2.1 Firing bay

If transient conditions are to be measured in addition to steady thrusts it is necessary to make the measuring system as still as possible to raise its natural frequency above the frequency of any fluctuations which are to be measured. This necessitates a firm anchorage for the rig. A bay, made of reinforced concrete and capable of sustaining much higher loads than would be imposed by the rocket motor, was built in the form shown in Fig. 1. Axial thrust is taken on a plate let into the floor and side thrust on the two concrete buttresses to which the side struts can be attached at different levels as required. The flat plates to which the side struts are themselves attached are bolted to a rigid frame and it was found necessary to pour Araldite between the plates and the frame to prevent flexing (see Fig. 2). This has the added advantage of damping the plates.

2.2 Thrust stand

The rig (Fig. 2) is constructed within a steel frame which mates with the fixed members in the bay so that the complete unit can be lifted out and replaced as required. This has proved to be a mistake because the frame has always to be realigned in the bay after replacement and the adjusters necessary for this purpose introduce flexibility which increases strut interaction.

The motor is held in a sub-frame which must be as rigid and as light as possible and must possess accurately machined surfaces to mate with the datum surfaces on the motor which define its geometric axis. This frame is supported by six struts, d , e and h being orthogonal, f and bein parallel to e and h respectively and g being parallel to e but displaced by a distance c' in the plane of e and h . The motor thrusts vertically downwards in line with strut d and side forces are measured in one plane by f and e and in the other at right angles by i and h . g could be used to measure the torque forces but is not instrumented for reasons discussed later. The motor must be fired vertically so that the change of charge weight during firing is solely a component of the axial thrust. Any asymmetry in burning about the vertical axis will result in forces in the side struts which cannot be distinguished from those due to thrust alignment, but usually this effect is small.

Ideally, each strut should have a frictionless universal joint at each e so that it can resist only forces along its axis, the measuring load cell bei mounted between these joints. In practice, to reduce friction to a minimum, the cell is mounted between short rod flexures which, although stiff in compression, allow sideways movement of the strut end under a small reproducible force which can be calibrated out of the system. In the case of strut g the cell is omitted and the flexures are joined by a solid bar. The construction of a strut is shown in Fig. 3.

The virtual elimination of friction implies that any oscillation induced by motor transients, particularly on ignition, will persist as a decaying oscillation long after the initial disturbance has ceased. Oscillatory driv forces near the natural frequency will result in such high oscillatory forces in the side struts that analysis si impossible and the load cells may be destroyed. To overcome this difficulty hydraulic dampers, such that movemen of the strut end pumps oil from one side of a piston to the other through a narrow gap, are mounted at the motor end of all struts. If the correct grad of oil is used it is possible to damp the structure critically. The oil is retained in place by metal flexible seals secured in place by Araldite. A theoretical treatment of these dampers has been given elsewhere[1].

2.3 Alignment and calibration

The ends of the thrust struts are clamped to the fixed parts of the damp to permit initial alignment of the rig, the clamps being removed before final alignment. This initial rig alignment is accomplished by using an analogue

the motor body. This analogue reproduces all the datum surfaces of the motor and provides a plane surface, at a convenient height, normal to the geometric axis of the motor. Thus, when this plane surface is set level, by adjusting the lengths of the struts, the geometric axis is set vertical. Using a good commercial spirit-level, the error need not exceed 0.05 milliradian. At this stage the axial strut is assumed to be truly vertical and alignment of the side struts is carried out by careful measurement. The criteria for accuracy of alignment of these struts are given in Appendix A but the axial strut must be aligned so that the axes of the upper and lower flexures are within 0.03 mm (0.0012 inch) of the motor axis. The upper flexure is positioned to within these limits by accurate machining of all fittings and the lower end of the strut is adjustable by screws in the planes of the side struts. Adjustment is made by applying a known vertical load along the axis of the rig and altering the position of the lower end of the main strut and the length of the side struts until the side loads are within acceptable limits. These residual side loads are applied as corrections to the measured side loads obtained during a firing.

The problem of applying accurately a vertical load was solved initially by machining a frame which fitted the datum surfaces on the rig and suspending weights from an accurately located point on the frame by a steel wire. The maximum force which could be applied by means of this device was about 1300 N (300 lbf) and it was necessary to extrapolate linearly the interaction figures to correspond to the thrust of the motors. This has been superseded by applying a vertical load through a long strut consisting of a hollow tube with a flexure at each end. This is aligned vertically on the motor axis and a force applied to its upper end (Fig. 4).

The diameters of the flexures of this strut are kept as small as possible consistent with sustaining the compressive load and the force may therefore be considered to act along their axes. The strut is about 2.5 m (100 inches) long and is aligned by means of a plumb line suspended inside the tube, the plumb line being suspended from a hole drilled on the centre line of the upper flexure and the plumb bob hanging between four contacts mounted on the lower flexure. The contacts, adjusted by means of a mandrel to be concentric with the axis of the lower flexure, have their surfaces lying on a circle 0.1 mm (0.004 inch) greater in radius than the plumb bob. The plumb line is conducting and connected electrically to the tube whilst the contacts are insulated and are connected each to its own bulb and a battery in a small portable box.

When the strut is vertical the plumb bob does not touch any contact and all lights are out. If any light is on it indicates the way the strut is inclined. With all lights out the bob is less than 0.1 mm (0.004 inch) fr the axis and hence the angular misalignment cannot be greater than 0.04 mil radian. The plumb line is undisturbed by wind and the accuracy is not affected by any distortion of the tube, as location is governed by the end flexure fittings. The end fittings can be changed to allow for different thrust ranges and different motor attachment points; fluid damping has bee allowed for, but found unnecessary.

The lower end of the strut is clamped to the rig by a quick-release co ing with accurate location and the upper end fits in a similar manner to a solid rod with a standard load cell fitted to its upper end. This rod is constrained to move with a parallel vertical motion by two pairs of flexure mounted on the bay wall and the weight of the complete assembly is just balanced by low rate springs attached to overhead rigid beams (Fig. 4). Between these beams and the solid rod, and attached to the beams, is a "Macklow-Smith" capsule with a small gap between its piston and the standar load cell; when the capsule is pressurised it acts as a ram and applies controlled loads to the load cell and rod system. The magnitude of the lo can be measured to better than 0.1% by the standard load cell and a digital voltmeter. As the movement of the solid rod is constrained to be vertical cannot exert side loads on the main rod nor apply bending loads to the uppe flexure. The flexures controlling the solid rod are attached to it by scr ends and knurled clamping nuts, so that it can be moved sideways in two pla to set the main strut in a vertical position. Once the solid strut has be aligned vertically the knurled nuts must always be adjusted in pairs to ret this verticality. Before a firing the calibration strut is removed and th remaining structures swung to each side of the bay.

To calibrate the lateral struts, weights are added to a pan suspended a light string which passes over low friction pulleys and is attached to fi tures in line with each of the lateral struts.

3 RECORDING

So far tests have been carried out with motors having such short burni times that transient movements of the thrust vector could not be recorded b the available digital recording system. Although the sampling rate of cac channel is sufficient, the equipment switches from channel to channel seque tially at 1 msec intervals, so that an interval of 5 msec elapses between t

first and last sample required to compute the instantaneous position of the vector. Significant movement of the vector is possible in this time and spurious oscillation may also cause errors. A new high speed digital recording system is being developed, but for the time being analogue records, with their attendant inaccuracy and tedious record reading, have to suffice.

Load cell outputs are sufficient to allow direct recording using galvanometers without amplifiers, the natural frequency of the galvanometers being 40 Hz. This results in a reduction in amplitude of signals at 110 Hz (the natural frequency of the rig) to 13% of the DC value. Despite this and the near-critical hydraulic damping of the rig it is still found necessary to introduce additional filtering, as shown in Fig. 5. This reduces spurious rig vibration on the traces to acceptable levels with the exception of a 30 Hz oscillation which appears at times on some traces. This is thought to be due to lateral vibration of the "fixed" damper member on its struts which transfers forces through the damping oil.

A trace reader is used to punch paper tape which is fed to a computer to convert trace deflections to force units and to correct each reading for interaction derived from the axial thrust at the same moment in time. At the present time each trace is read at the same point on the time scale at intervals of 5 msec and these points are averaged at 50 msec and 100 msec intervals to smooth out any remaining rig vibration. Examples are given in Fig. 6 of the side forces exerted by two motors of about 5000 N (1130 lbf) axial thrust after corrections had been applied and points had been averaged over 50 msec periods. One motor had a nozzle in nominally correct alignment, whilst the other had been intentionally rendered asymmetric. It is often sufficient to examine these traces individually, but in some instances the total impulse on each strut has been obtained and the amplitude and position of the impulse vector calculated. If necessary, this could be done for any desired interval in the firing by writing a suitable computer program. The method of calculating the thrust vector from the individual forces is given in Appendix B.

4 ACCURACY LIMITATIONS AND IMPROVEMENTS

The use of analogue recording limits the possible accuracy of measuring side loads to ± 1.3 N (0.3 lbf), but a digital system will reduce the error on this account to negligible proportions.

The load cells in use are of American "Tyco-Bytrex" manufacture embodying semi-conductor strain gauges and are capable of an accuracy of 0.1% of

calibrated range. They have not significant inaccuracy when used up to 1(of their maximum range, thus permitting heavier duty units to be used to a for shock loads. Even so, the overloads they can tolerate are insufficie large and losses of cells due to accidental overload by light blows on the in the normal course of work are too great. An equally stiff unit with h overload capacity is desirable.

At the moment the greatest source of inaccuracy of the rig is due to uncertainty about interaction (cross-coupling). The worst example is a l in one side strut of about 22 N (5 lbf) at 5000 N (1130 lbf) axial load. effect is non-linear and cannot be corrected by alignment of the axial str its value probably being known to about ± 1 N (90.25 lbf). As stated pre it is thought to be due to distortion of the frame on which the rig is mou and is being combated by filling gaps with Araldite. The effects of this remedy have not yet been evaluated.

In each of the early firings a large impulse of about 220 N (50 lbf) measured at the nozzle end of the motors starting about 10 msec after igni and lasting for about 20 msec. This was thought to be a reflected shock the nearest wall of the bay, a supposition which was supported by the fact the impulses from each motor always acted within a 6° angle, whereas the m ing position of the motor about its vertical axis in the rig was random. combat this effect the rig was surrounded by a cylindrical shield a little 1 m (3 ft) diameter and extending from the floor to about 0.3 m (1 ft) abo the nozzle. It was hoped that this would prevent any shocks from the aby walls reaching the rig and that any shocks from the shield would act on th symmetrically in all directions. The impulses at the nozzle end were eliminated after this modification but there still remain small impulses a head end which are thought to be due to distortion of the frame.

The 30 Hz oscillations due to the dampers may be eliminated by bondin stiffening members to the rods supporting the damper units. Apart from r ing the amplitude of oscillation this modification should raise the freque to a point where it can be filtered electrically. Also a new design of s which should eliminate this trouble and ease alignment problems in under t The upper frequency limit of the rig will then be governed by resonance of motor and sub-frame on the supporting struts. This has been found to be 110 Hz in all directions as measured by shock excitation. The maximum frequency which can be followed without undue amplitude or phase distortio will therefore be about 50 Hz.

5 CONCLUSION

The system described is capable of determining the direction of the thrust vector of a rocket motor over short intervals of time to within about 0.7 milliradian. The overall impulse vector can be determined to 0.5 milliradian if we assume random record reading errors. Improvements will reduce this error significantly.

APPENDIX A

Effects of strut misalignment

Main strut

The main strut is by far the most critical as it has to resist a large force. The strut may be misaligned in two ways or a combination of these, i.e. it may be vertical but displaced to one side, or it may be at an angle to the vertical. In the former case, if it is displaced by a distance a from the motor axis, a truly axial motor thrust will produce a couple Ta acting about the end of the main strut. This will be largely resisted by the upper strut with a moment arm b such that

$$Ta = T_1 b \quad .$$

Inserting the likely figures $T = 5000$ N , $T_1 = 0.5$ N (maximum permissible error in side force measurement) , $b = 1$ m , then

$$a = \frac{0.5 \times 1000}{5000} = 0.1 \text{ mm } (0.004 \text{ inch}) \quad .$$

By accurate machining this should be easy to achieve.

If the strut is at an angle to the vertical ψ then a side thrust of $T \sin \psi$ will be generated; but

$$\sin \psi = \frac{a'}{y}$$

where a' is the displacement of the lower end of the strut from the vertical and y is the length of the strut, say 300 mm (12 inches). Inserting the above values, we obtain

$$a' = \frac{0.5y}{T} = \frac{0.5.300}{5000} = 0.03 \text{ mm } (0.0012 \text{ inch}) \quad .$$

Alignment to this accuracy on site is not possible with equipment which is easily available and in any case the effective axis of the main strut flexure may be displaced by more than this from the geometric axis.

After adjusting to within 0.1 mm (0.004 inch) by levels and straight edges the final adjustment must be made by applying a load, similar to the motor thrust, exactly along the line which will be occupied by the motor axis. Any misalignment of the strut will produce side loads which must be reduced to a minimum.

Side struts

To demonstrate that the consequences of misalignment of the lateral struts are far less severe it is sufficient to consider one of a number of possible events which might occur. Let the axial thrust T be displaced a distance a from the geometric axis of the motor. In a real rig the effective centre of rotation of the inner flexure of the side struts will be displaced from the main strut axis by a distance c'.

If the struts are perfectly aligned the forces in them will be as in Fig. 7a, i.e. in the main strut, the force T_m, in the side struts the forces T_1 and T_2.

Taking moments about A gives

$$- Ta + T_1 b = 0 \quad , \tag{1}$$

about B gives

$$T (c' - a) - T_M c' + T_1 b = 0 \quad , \tag{2}$$

and about C gives

$$T (c' - a) - T_M c' - T_2 b = 0 \quad . \tag{3}$$

From these equations $T_1 = \frac{Ta}{b} = - T_2$ and $T = T_M$ which is obvious by inspection.

If we now assume the upper strut to be misaligned by an angle θ as in Fig. 7b and the forces to be T_M in the main strut, T_3 in the upper strut and T_4 in the lower strut, then taking moments about A gives

$$b T_3 \cos \theta + c' T_3 \sin \theta - Ta = 0 \quad , \tag{4}$$

about B gives

$$T\,(c' - a) - T_M\,c' + b\,T_3 \cos\theta = 0 \quad ,$$

and about C gives

$$T\,(c' - a) - T_M\,c' - T_4\,b = 0 \quad .$$

From (4)

$$T_3 = \frac{Ta}{b\cos\theta + c'\sin\theta} = \frac{Ta}{b}\left(\frac{1}{\cos\theta + \frac{c'}{b}\sin\theta}\right) \quad .$$

Resolving vertically

$$T_M = T - T_3 \sin\theta$$

$$= T - \frac{Ta}{b}\,\frac{1}{\cos\theta + \frac{c'}{b}\sin\theta}$$

$$= T\left(1 - \frac{a}{b\cos\theta + c'\sin\theta}\right) \quad .$$

Resolving horizontally

$$T_4 = -T_3\cos\theta$$

$$= -\frac{Ta}{b}\left(\frac{\cos\theta}{\cos\theta + \frac{c'}{b}\sin\theta}\right)$$

$$= -\frac{Ta}{b}\left(\frac{1}{1 + \frac{c'}{b}\tan\theta}\right) \quad .$$

Equations (7), (8) and (9) have been reduced to a form where they are comp
of the thrusts when aligned multiplied by a factor caused by misalignment.

If we take a typical instance where the ratio of b:c':a is 100:40:1 we can evaluate the errors caused by different amounts of strut misalignment and these are given in the Table. It can be seen that an error of up to 3° would be tolerable, but in practice the alignment attained is much better.

APPENDIX B

Analysis of data from thrust alignment records

For the purpose of analysis the thrust stand is considered to contain three orthogonal axes formed by the intersection of three orthogonal plane (O , H and R) as in Fig. 8, and each containing the axes of struts as follows:

O plane	-	containing axes of	f ,	e	and	d
R plane	-	containing axes of	i ,	h	and	d
H plane	-	containing axes of	h ,	e	and	g

The geometric axis of the motor is vertical and is coincident with th axis of the strut d . The motor thrust will normally be in such a dire as to put strut d into compression. The force in all struts will be de by the letter identifying the strut and tensile forces in all struts will considered positive with the exception of d in which compressive forces be positive. This convention arises from the method of calibration of th struts and reduces the likelihood of error if it is retained throughout th analysis.

Consider a thrust vector T acting in a completely general direction through the system passing through a point K in the O plane and L in R plane. This force can be resolved at K into three forces, T_O , T and T_H acting in the three planes. T_O and T_R make small angles of and β respectively with the vertical through K . m and l are the distances of K and L respectively above the H plane and distances in upward direction are considered positive. b is the distance between the and or i and h struts and c' is the distance between the g and struts.

Resolving the forces in each plane we have in the O plane

$$T_O \sin \alpha = f + e + g \quad ,$$

$$T_O \cos \quad = d \quad .$$

Therefore

$$T_0 = \sqrt{(f + g + e)^2 + d^2}$$

and

$$\sin = \frac{f + e + g}{\sqrt{(f + e + g)^2 + d^2}} \approx \frac{f + e}{d} ,$$

as $(f + e + g)^2 : d^2$ will usually be about $1:10^5$ and g is small. Moving T_0 along its line of action and resolving where it intersects the vertical axis of d (Fig. 9) we have, taking moments about the axis of the h strut,

$$l\, T_0 \sin \alpha = bf$$

or

$$l = \frac{bf}{T_0 \sin \alpha} = \frac{bf}{f + e + g} \approx \frac{bf}{f + e} .$$

Similarly in the R plane

$$T_R \sin \beta = i + h ,$$

$$T_R \cos \beta = d .$$

Therefore

$$T_R = \sqrt{(i + h)^2 + d^2}$$

and

$$\sin \beta = \frac{i + h}{\sqrt{(i + h)^2 + d^2}} \approx \frac{i + h}{d}$$

as before.

Taking moments in the R plane about the axis of the e strut gives

$$m\,T_R \sin\beta = ib \quad ,$$

so

$$m = \frac{ib}{T_R \sin\beta} = \frac{ib}{i + h} \quad .$$

Resolution of torque:

There may still remain a torque which could be obtained simply from

$$\text{torque} = c'g \quad .$$

The difficulty in practice is that direct measurement of the torque i not really practicable with the small side forces which are involved. Le consider a motor of 5000 N (1130 lbf) axial thrust, when the maximum torqu likely to be 20 N (4 lbf) at a distance of 2.5 mm (0.1 inch) from the axis In a practical rig the distance c' is likely to be about 150 mm (6 inche so that the force to be measured in g will be 0.33 N (0.07 lbf) maximum If g is displaced vertically the moment arm c' could be reduced to 2.5 (0.1 inch) but even to attain 1% accuracy it would have to be positioned ± 0.025 N (0.001 inch) in relation to the 0 plane. With this configure the stiffness in torque, and hence the natural frequency, would be low.

The solution which has been adopted is to leave strut g at about 1 (6 inches) from e but not to measure the force in it. As we have seen force in e will not differ by more than 2% from the total in e and g that the force in g can be ignored. From Fig. 8 and 9 it can be seen the torque is given by $n\,T_R \sin\beta$, but

$$n = (m - 1)\tan\alpha$$

and

$$\tan\alpha = \frac{\sin\alpha}{\cos\alpha} = \frac{f + e + g}{d} \quad .$$

Therefore

$$\text{torque} = \frac{(m - 1)\ (f + e + g)\ (i + h)}{d}$$

$$= \frac{(m - 1)\ (f + e)\ (i + h)}{d}$$

as g is small.

The value of the original thrust vector T is given by

$$T = \sqrt{(f + e)^2 + d^2 + (i + h)^2}$$

when g is ignored.

In practice the difference between T and d is so small as to be negligible.

TABLE

Errors due to strut misalignment

Angular displacement of upper strut (T_3) 0 degrees	Ratio of measured value of force in struts with respect to true value of unity		
	T_3	T_4	T_M
0	1	1	1
18'	0.9987	0.9987	
30'	0.9978	0.9978	
1°	0.9958	0.9956	
2°	0.9920	0.9913	
3°	0.9883	0.9869	0.9995

Reference No.	Author	Title, etc
1	D. S. Dean E. A. Lyons D. R. Norman	A six component stand for thrust vector control experiments with rocket engines RPE Tech Report No. 67/12 (1967)

Attached: Drgs No RP 5208-5216

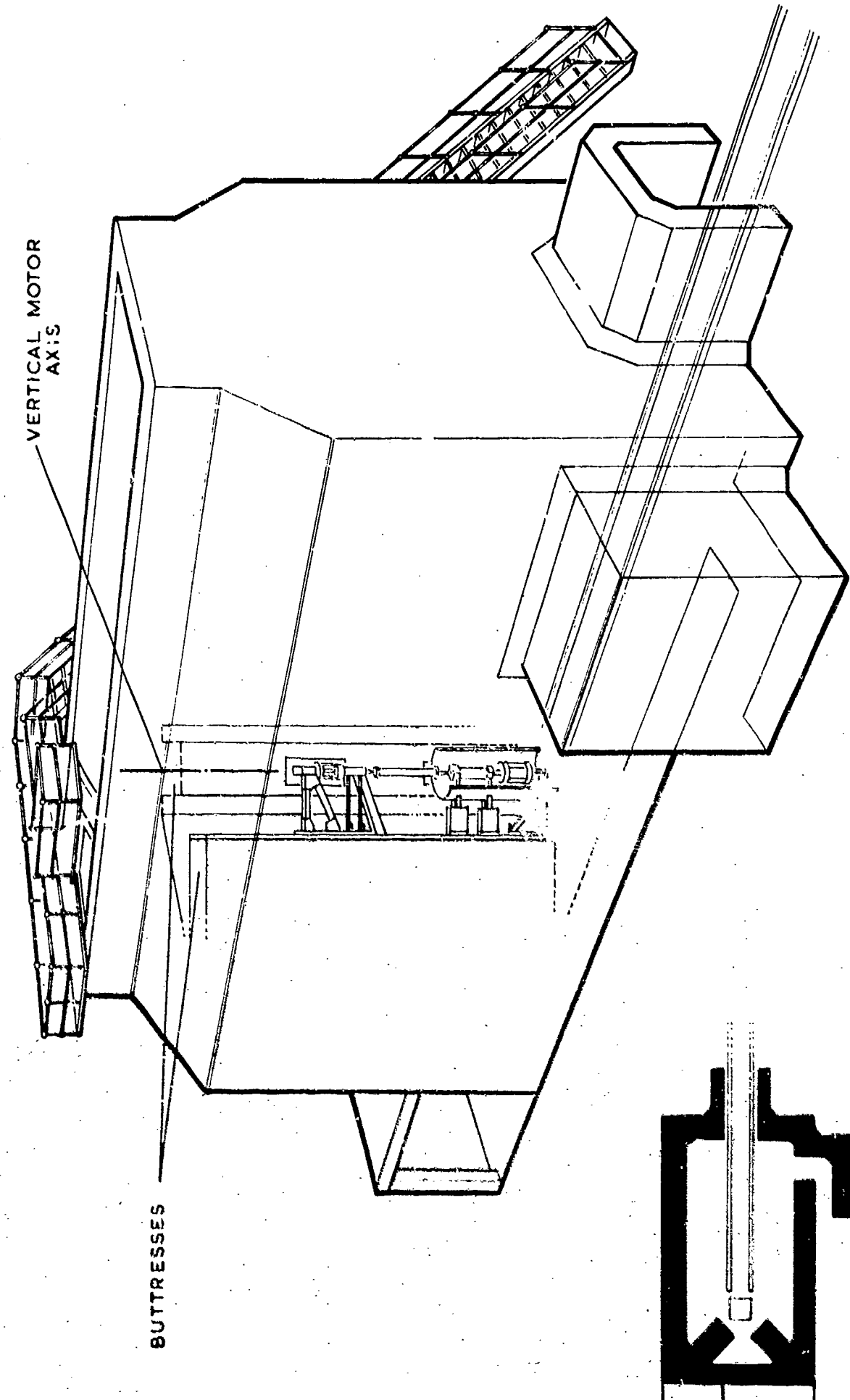
VERTICAL MOTOR AXIS
BUTTRESSES

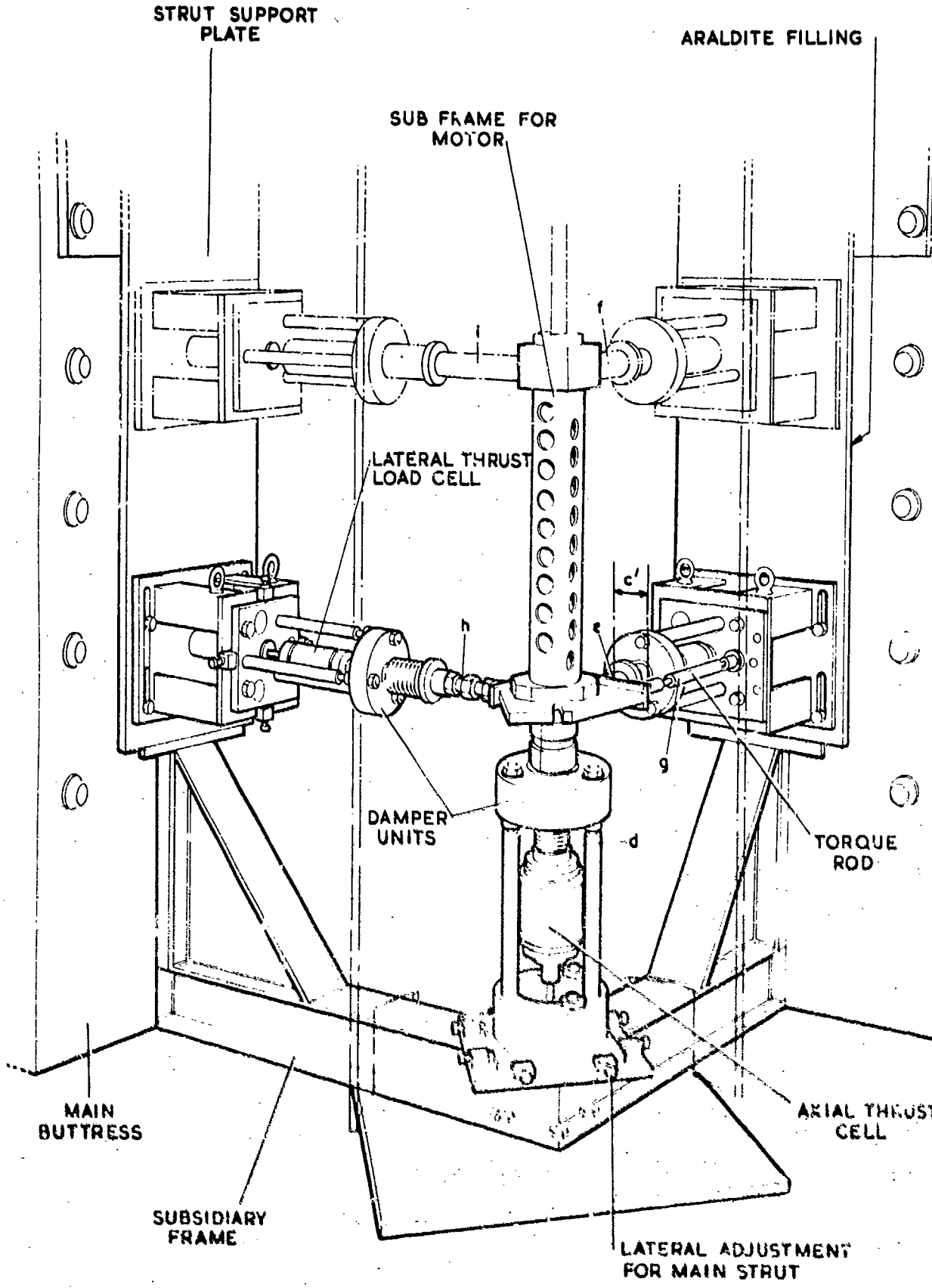

FIG. 2 ARRANGEMENT OF RIG

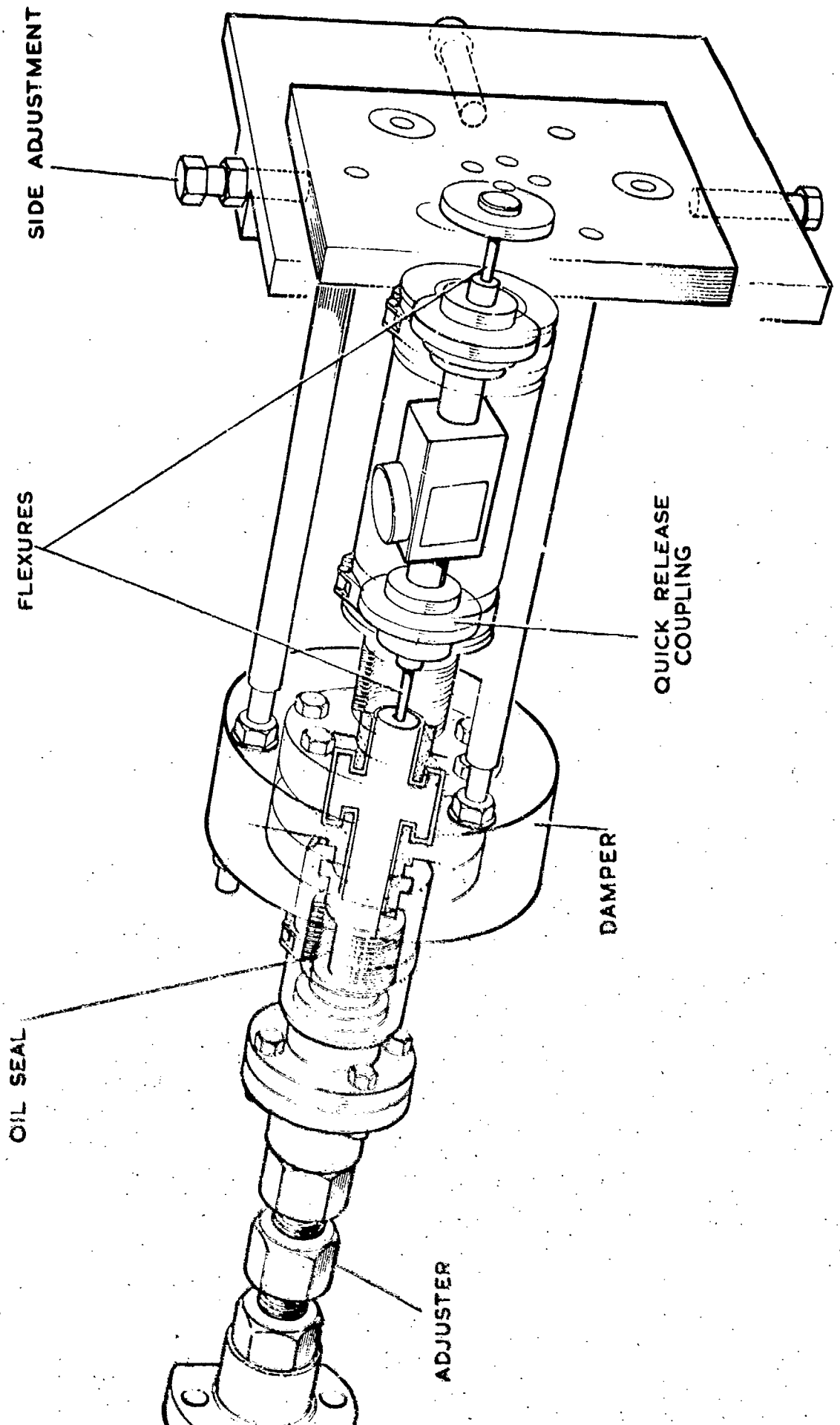
SIDE ADJUSTMENT
FLEXURES
QUICK RELEASE COUPLING
DAMPER
OIL SEAL
ADJUSTER

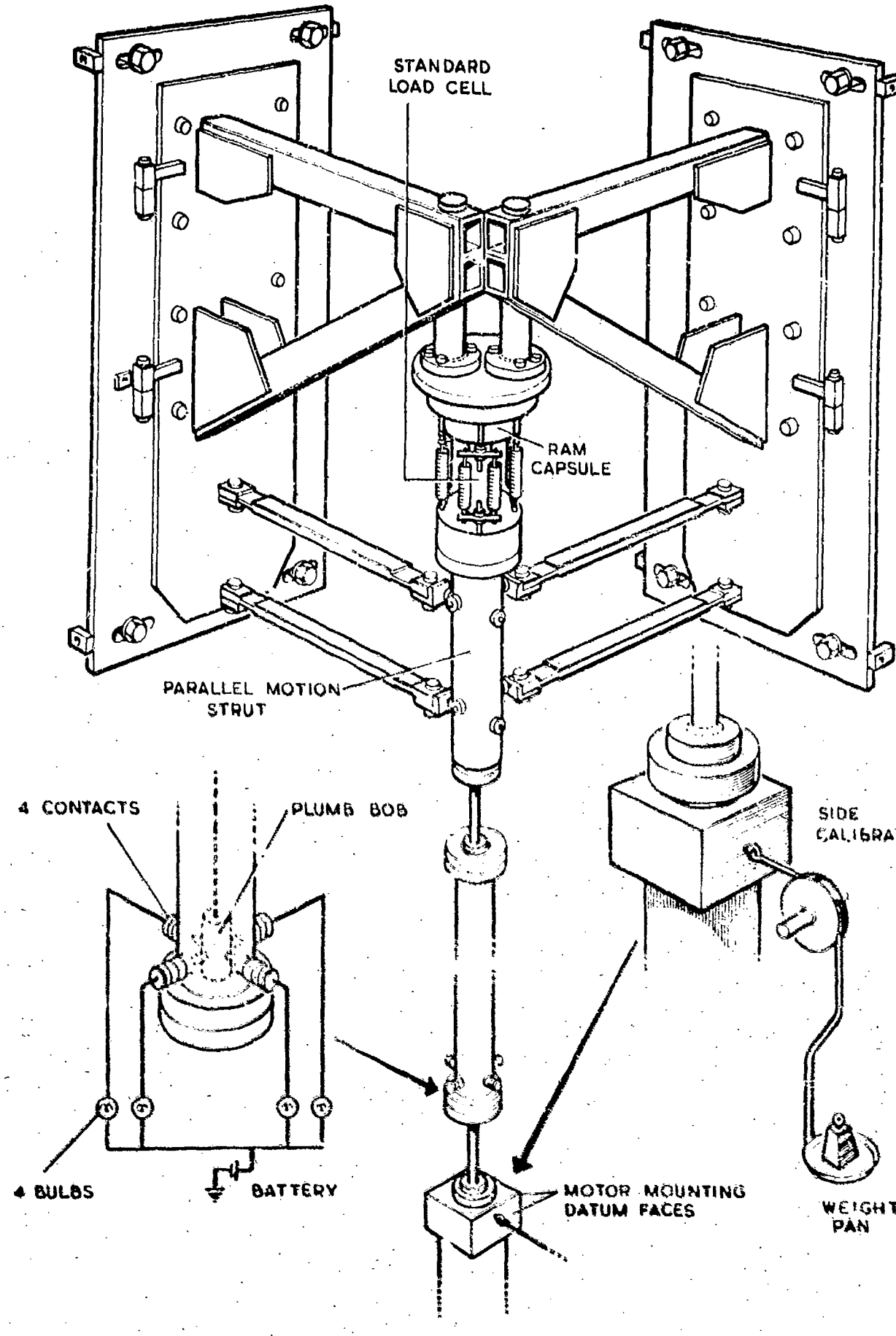
STANDARD
LOAD CELL
RAM
CAPSULE
PARALLEL MOTION
STRUT
4 CONTACTS
PLUMB BOB
SIDE
CALIBRA
4 BULBS
BATTERY
MOTOR MOUNTING
DATUM FACES
WEIGHT
PAN

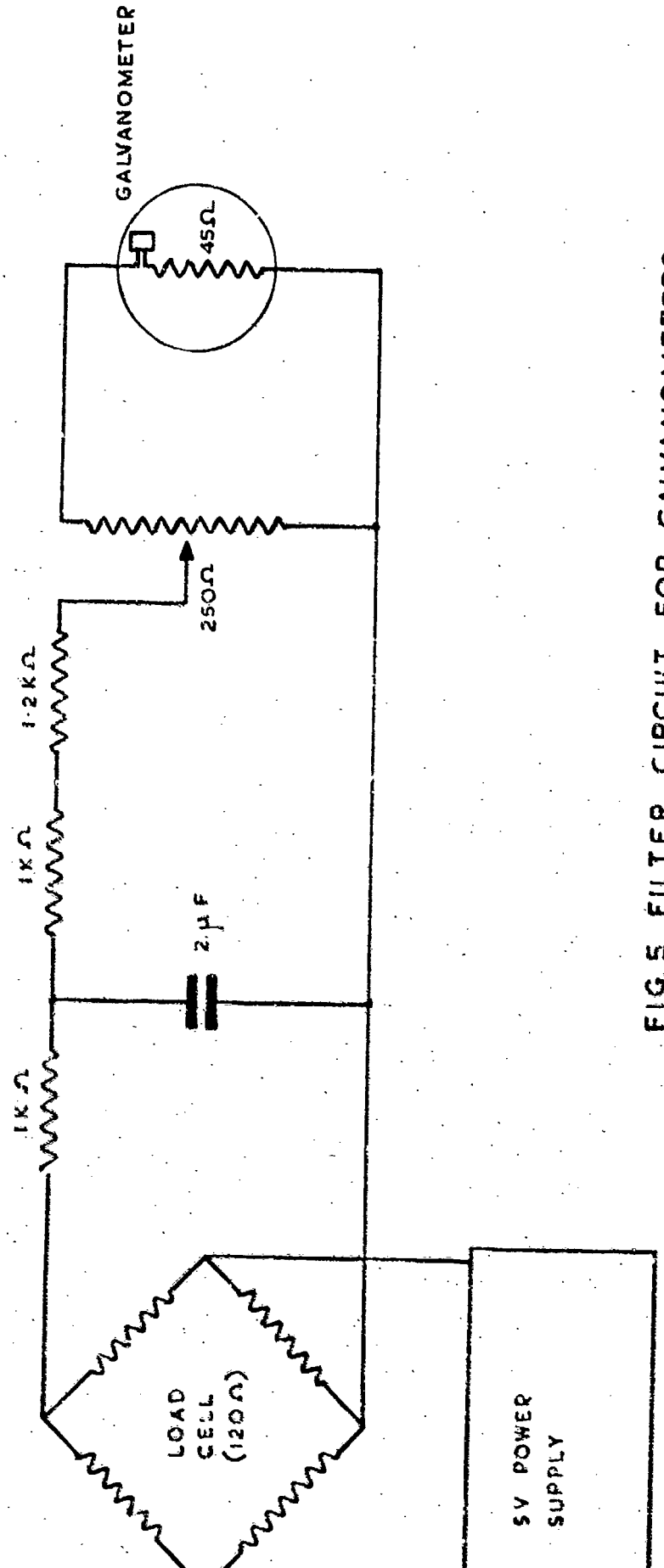

FIG. 5 FILTER CIRCUIT FOR GALVANOMETERS

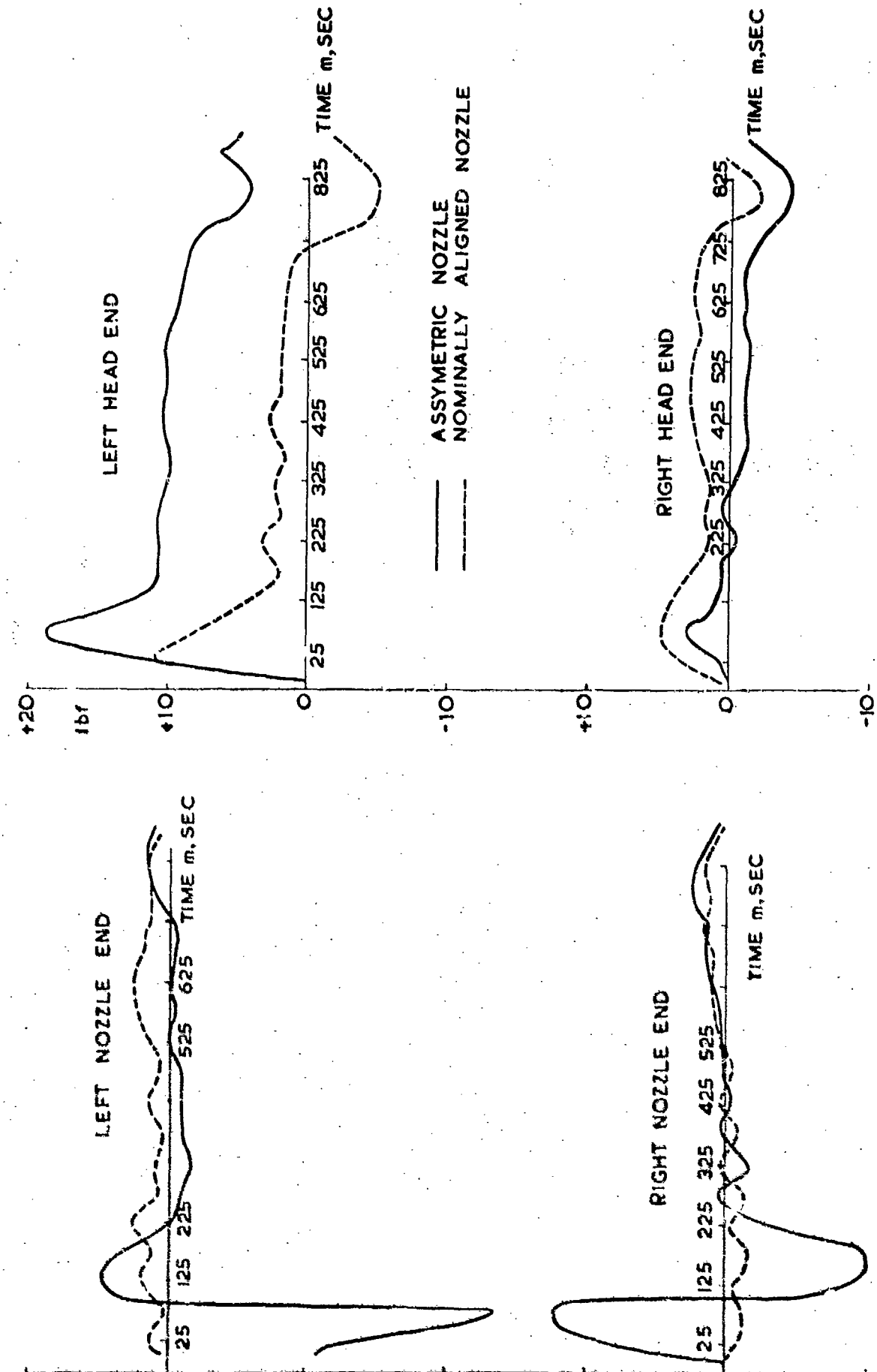

FIG. 6 TYPICAL SIDE FORCE MEASUREMENTS

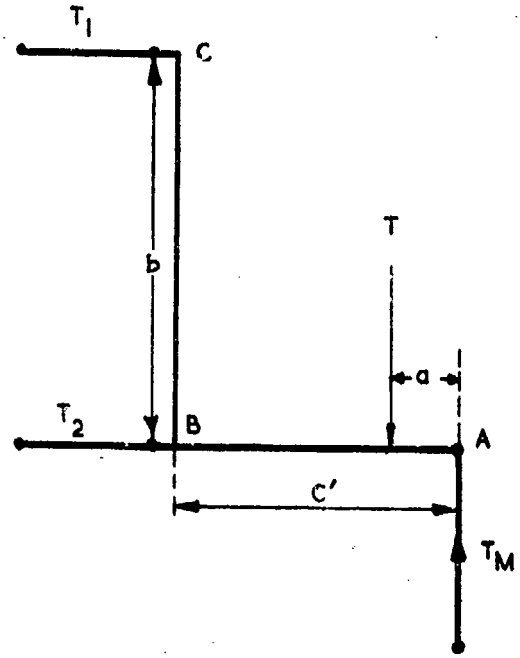

FIG. 7a STRUTS ALIGNED

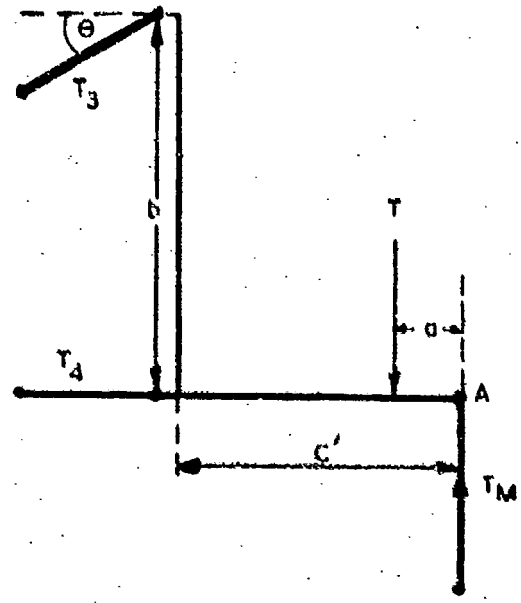

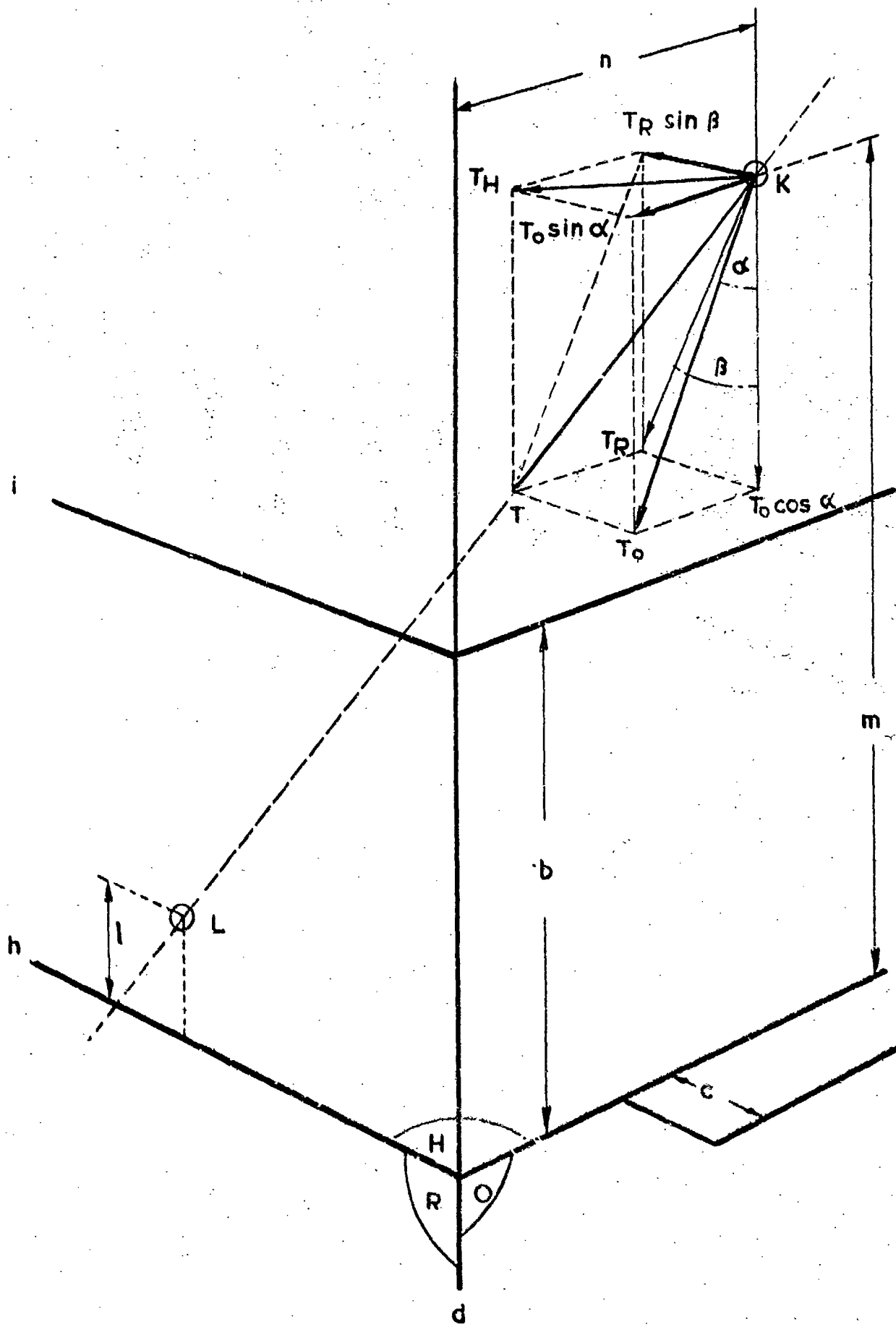
n
$T_R \sin\beta$
T_H
K
$T_o \sin\alpha$
α
β
T_R
i
T
$T_o \cos\alpha$
T_o
m
b
l
L
h
c
H
R
O
d

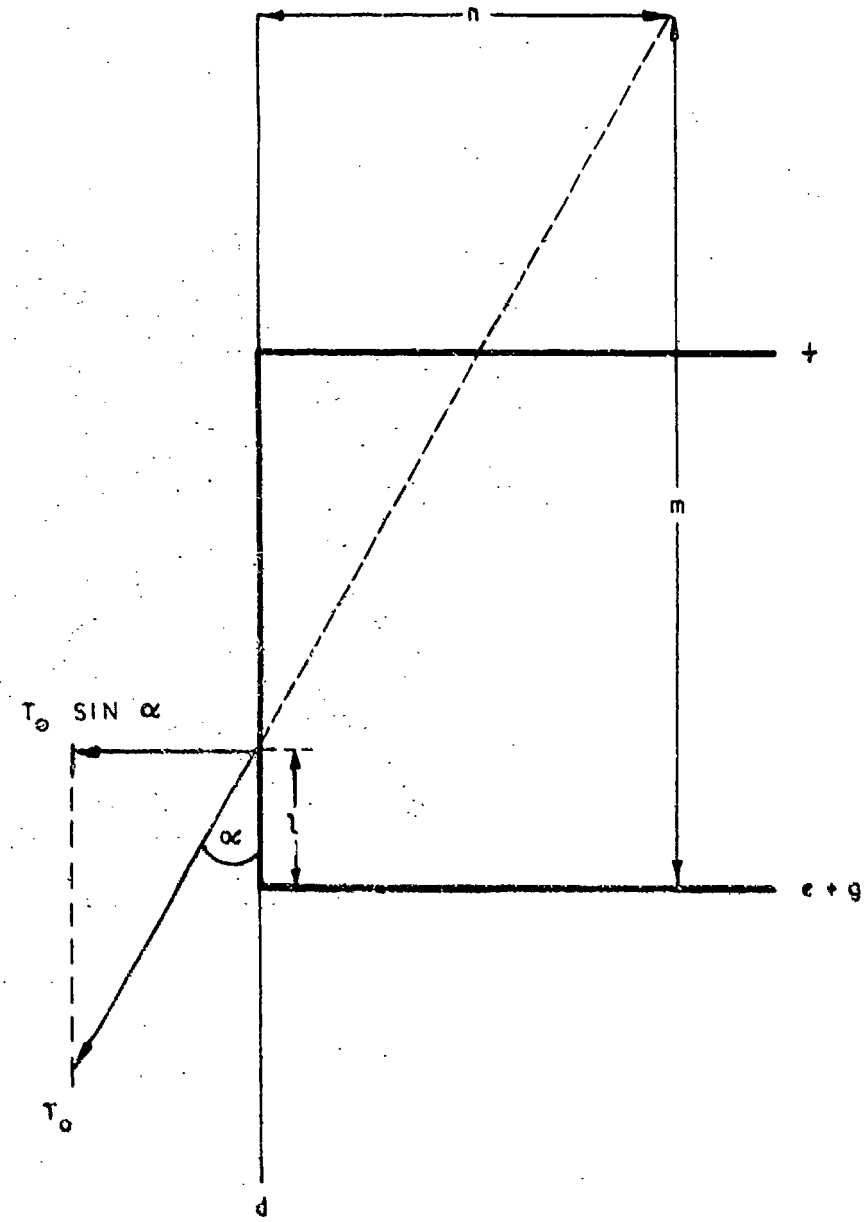
n
+
m
T_θ SIN α
α
l
e + g
T_θ
d